Melt Circulation and Recovery Solutions

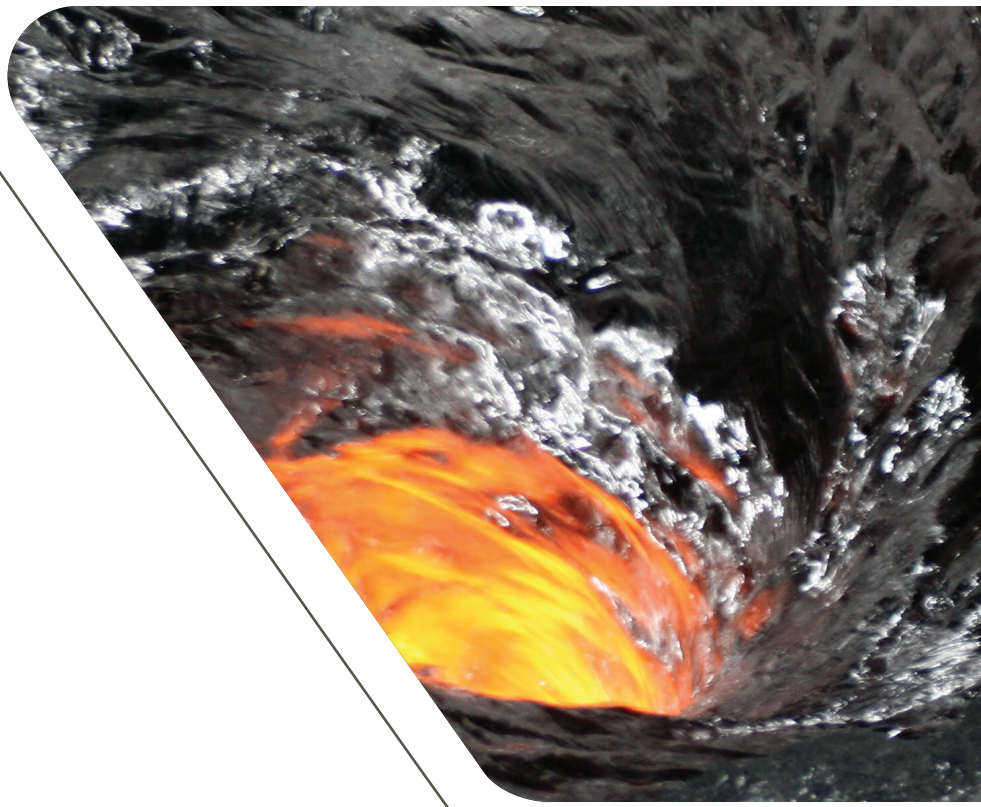

Pyrotek®

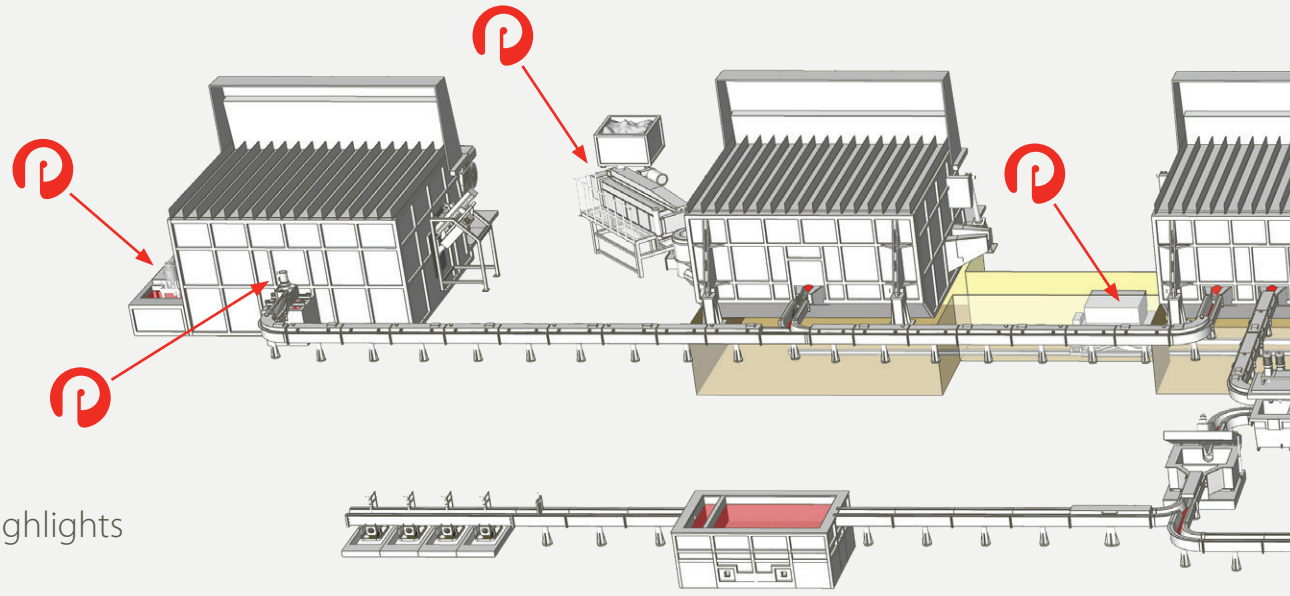

Pyrotek highlights

Pyrotek offers solutions for melt circulation, metal tran

Scrap Preparation and Remelt

Pyrotek offers system combinations that efficiently process, prepare and recover chips in-house. Pyrotek's dryers have incorporated air-jets that remove almost all chip moisture, and the Pyrotek LOTUSS vortex continuously and quickly submerges the chips and turnings.

Melt Recovery Chip Preparation

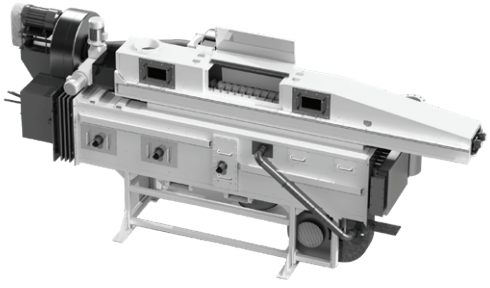

The jet bed dryer cleans chips with hot air obtained from its own treated exhaust gasses and then transfers the dried chips to the LOTUSS vortex system. Hoppers, conveyers, centrifuges, magnetic separators, fully integrated control systems and other pre-preparation equipment can be added to the Pyrotek system. Pyrotek chip drying systems can also be modified to meet specific project requirements.

Scrap Melting

The LOTUSS vortex works quickly with circulation systems to submerge light-gauge scrap and maximize the usable metal yields. Metal is moved by a mechanical or electromagnetic pump and pushed into the LOTUSS chargewell and then back to the furnace, creating full-circle circulation.

Melt Circulation and Transfer

Pyrotek circulation systems are designed to improve furnace circulation, save energy and improve metal quality. Each circulation system can be modified to match specific furnace layouts and sizes, and to meet project or location requirements. The systems also provide temperature and chemical homogeneity, improve melt quality, and optimize furnace performance with efficient heat transfer.

Electromagnetic Pump (EMP) Systems

Pyrotek electromagnetic pump (EMP) systems consist of the following main components:

- A chargewell containing the Pyrotek LOTUSS system
- An electromagnetic pump including fully integrated controls and cooling systems

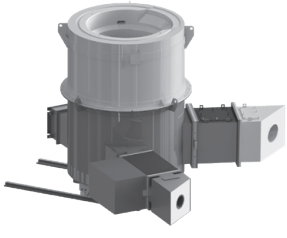

The Pyrotek LOTUSS is designed for use submerbing several different light-gauge scrap and alloy types in a deep vortex which minimizes further scrap oxidation. The LOTUSS can process 10-12 tonnes of scrap per hour and reach up to and sometimes beyond 98-percent recovery. Pyrotek LOTUSS is available for dry hearth and heeled furnaces.

The EMP circulates metal into the furnace with minimal bath surface disturbance. EMPs have no moving parts which reduces maintenance and consumable parts consumption. The pumps provide safe, controlled metal transfer from the automated chargewell tapout. The system allows scrap charging of the furnace without opening the furnace door and can be used to transfer metal to other processes.

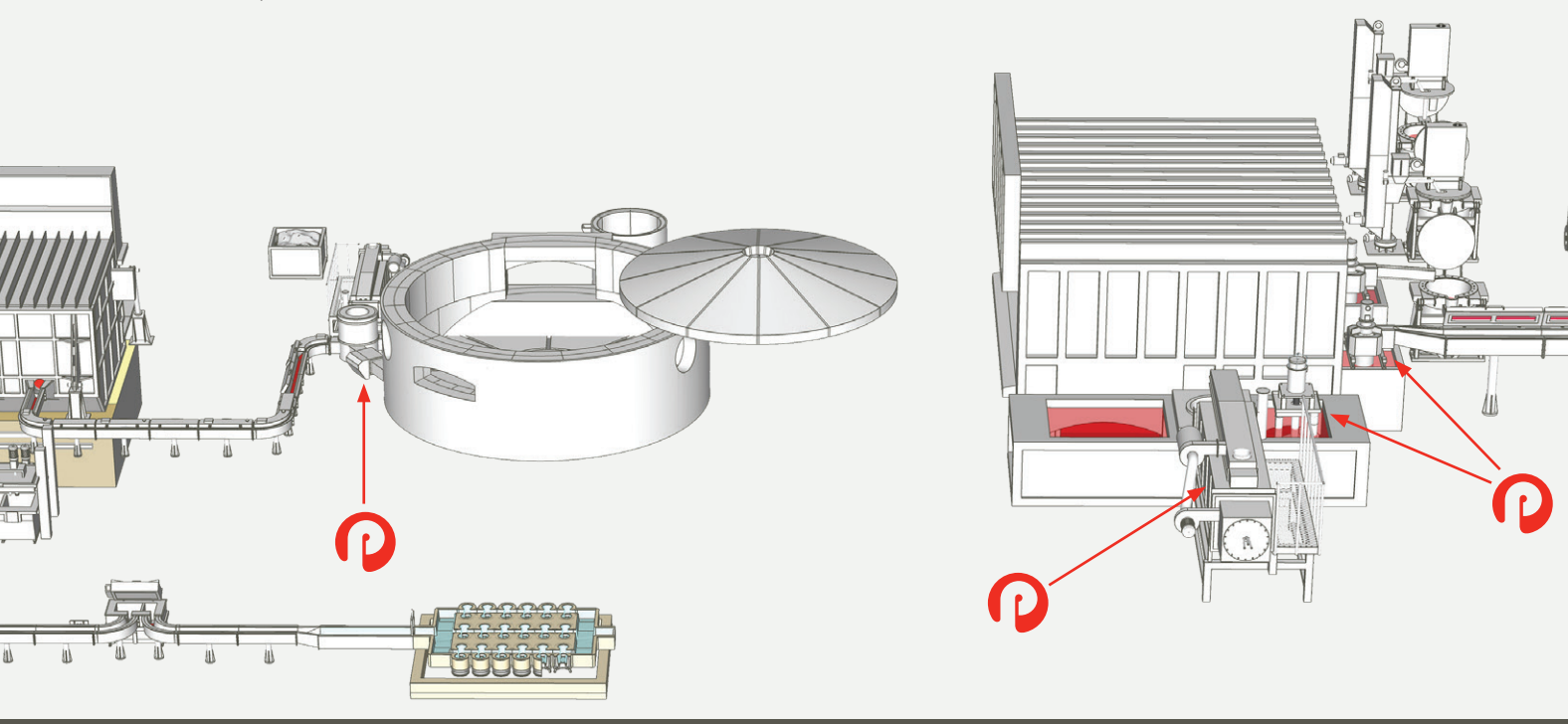

sfer, and recovery within aluminium processes.

Mechanical Circulation Pumps

Pyrotek circulation pumps (including the J-50 and T-35SDX options) are used for circulation in combination with many types of furnaces.

- Pyrotek J-series circulation pumps have high flow rates. They increase metal circulation rates and melt rates, and lower the conversion cost per kilogram. They can be installed in a side well and used with Pyrotek's LOTUSS system.
- Pyrotek Tensor® pumps have high-temperature alloy steel rods that are loaded under tension. The pumps also have ceramic posts that are held under compression to maximize their strength. The posts are stronger and more durable than their graphite counterparts.
- The T-35 SDX pump has a high flow rate that enables operators to reduce the speed to 250 rpm while maintaining the same flow. This reduces maintenance, consumable costs, and the pump footprint.
- All pumps can be equipped with Pyrotek's intelligent pump panel technology with integrated smart functions. These functions include, metal temperature measurement, laser level control, pump speed variation, pump vibration control, data logging, and alarm history tracking. All data can be utilized to improve plant performance.

Mechanical Transfer Pumps

- Pyrotek's overflow transfer system (OTS) moves molten metal from the furnace to downstream processes at lower transfer costs than traditional pumps and tapping-out procedures. OTS technology gently raises the metal from the bottom to the top of the transfer bowl, and generates about one-half the dross of traditional transfer pumps.
- The dual-chamber overflow transfer system (DC OTS) is designed for very low flow applications and is ideal for continuous casting lines and direct-chill casting pits.
- Pyrotek's RFM® overflow pump gently raises and transfers molten metal from small crucibles or melting/holding furnaces. It can be transported from one vessel to another, and its reinforced fibreglass material bowl allows for quick placement due to minimal preheat requirements.
- Pyrotek's T-35 T (Tensor) pump contains high-temperature steel alloy post rods that are loaded under tension. The pump's ceramic posts are held under compression to maximize their strength, making them stronger and more durable than their graphite counterparts.
- Transfer pumps allow customers to keep charging and melting in the furnace while metal is transferred.

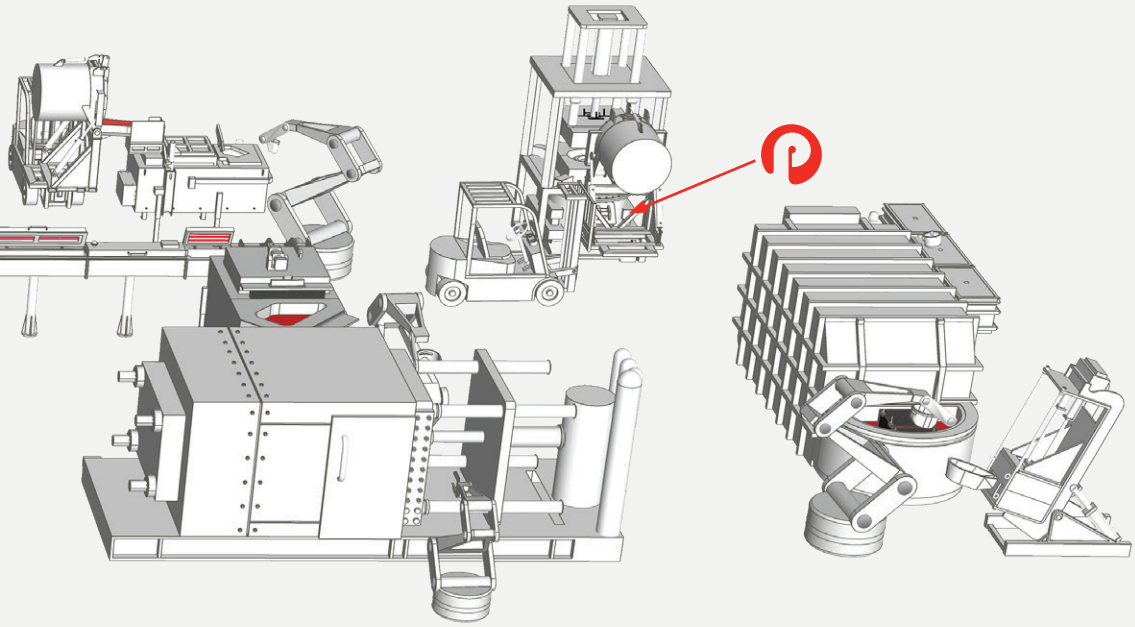

Die Casting

Casting and Dosing Pumps

Metal Casting System (MCS)

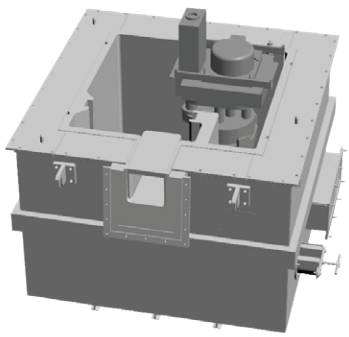

- The MCS moves molten metal between the furnace and the mould using a precision casting pump. The system has full pump flow performance control, which creates volumetric and non-turbulent filtered metal feeding. The MCS can also be used for low-pressure, gravity casting, high-pressure die casting, dosing, and sand-casting applications.
- Precision casting pump benefits include increased capacity and productivity, a reduced need for costly compressed air, a significant reduction in casting cycle time and less dross formation.
- The MCS furnace has an immersion heating system, allowing it to stabilize bath temperatures and prevent stratification. The furnace is not pressurized and can be filled at any time during the casting cycle. The furnace's airlock design keeps air out and allows inert cover gas use to prevent oxide formation and hydrogen absorption.

Other Products

- Coatings
- Dross pans
- Filtration Systems
- Floor tiles
- Gaskets
- Ladles
- Refractories
- Thermocouples

Global Resources, Local Support

Why Pyrotek?

Pyrotek® is a global engineering leader and innovator of technical solutions, integrated systems, and consulting services for the aluminium industry. Our products are used around the world in automotive, aerospace, rail transportation, and high-tech manufacturing. Pyrotek has global resources and local support at more than 80 locations in 35 countries. Choose Pyrotek for 60 years of aluminium expertise—from the smelter to the foundry.

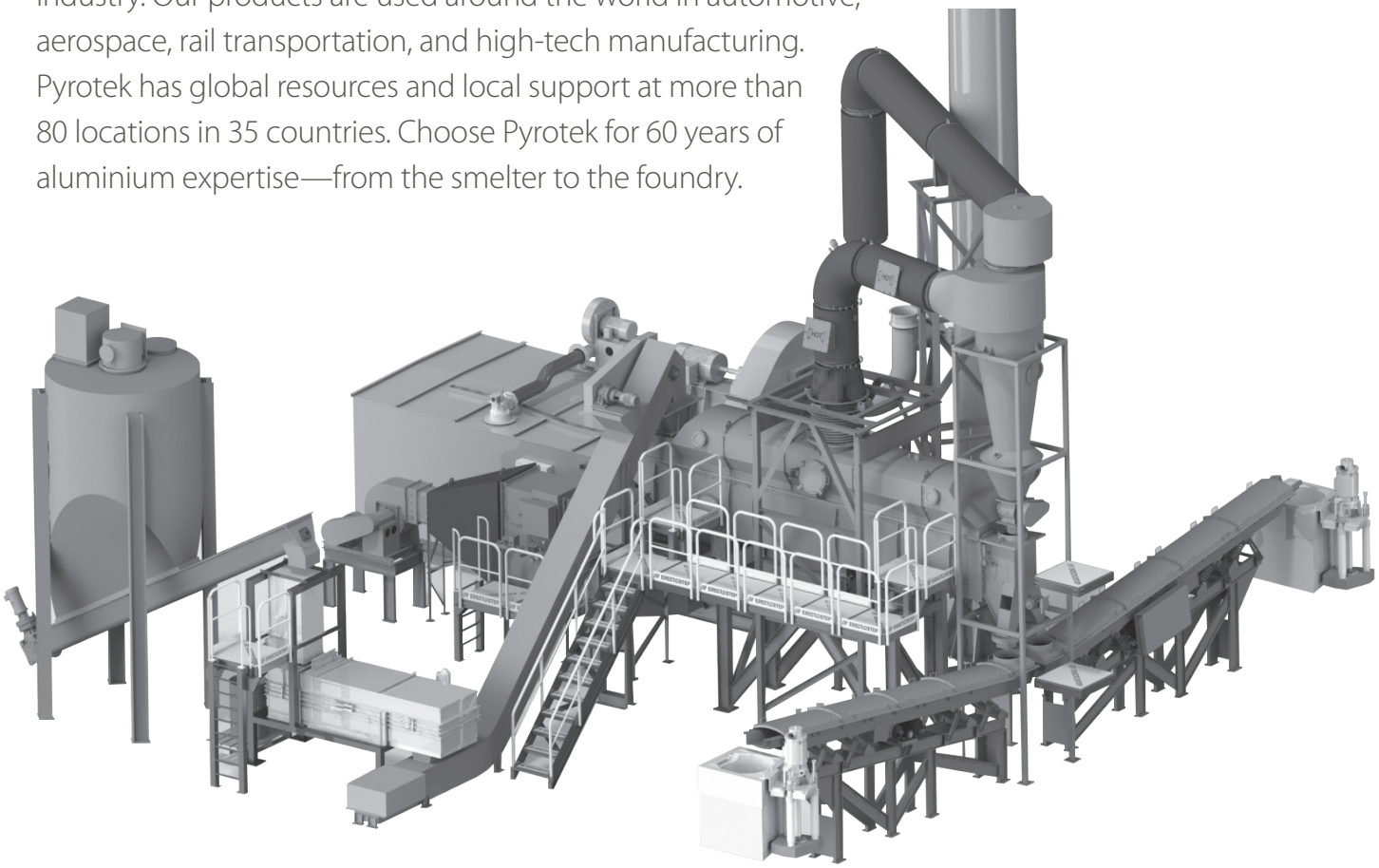

Pyrotek®